dual

features

Dual lounge is a dynamic seating collection designed to celebrate expression and elevate the conversation. The duality of materials offers a seat ripe for expression. Upholster in a single color, or two, or split the difference with a partially opaque knit base available in 11 finishes. A posture fit for every occasion, a low back chair for a relaxed or casual collaboration. A high back chair for when you need time to unwind and recharge. The lounge design introduces a residential aesthetic to bring a welcoming sensibility to a range of spaces – so that work doesn't feel like work.

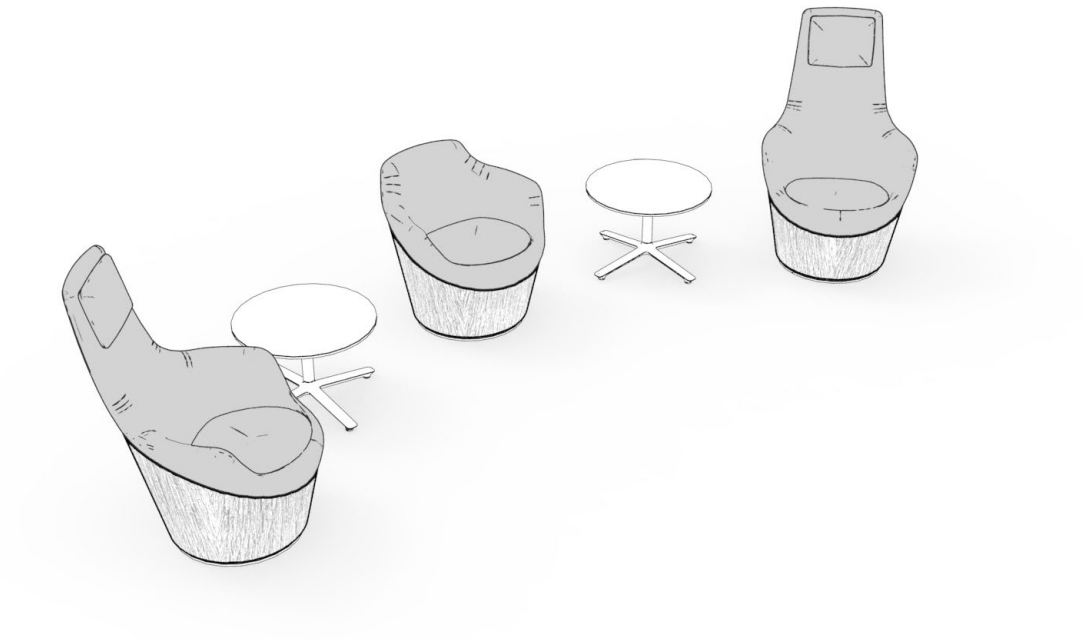

dimensions

- Designed and tested for users up to 300 lbs
- Meets ANSI/BIFMA requirements

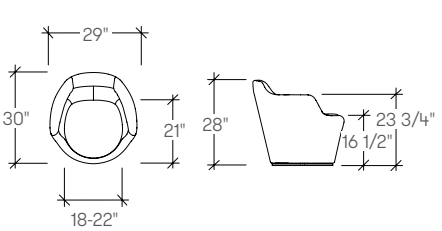

Dual Low Back Lounge
(STDA) / (STDB)

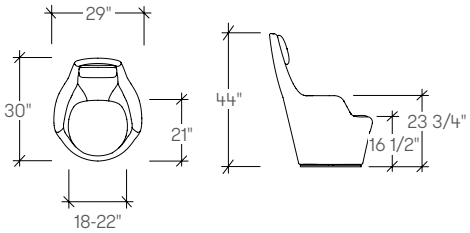

Dual High Back Lounge
(STDC) / (STDD)

dual

planning

A variety of configurations can be achieved with Dual Lounge, allowing for various configurations. The following typicals demonstrate the versatility that can be achieved.

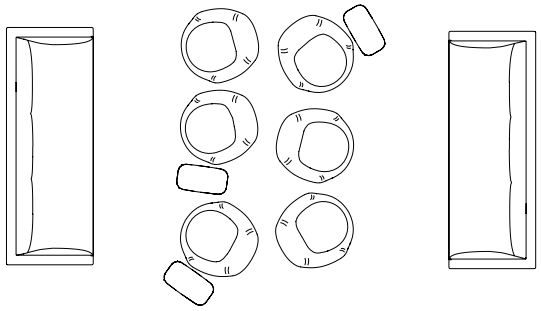

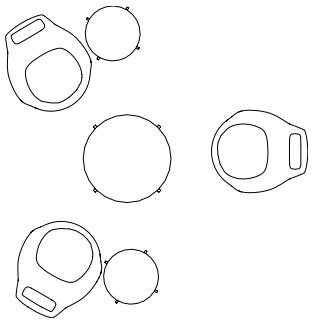

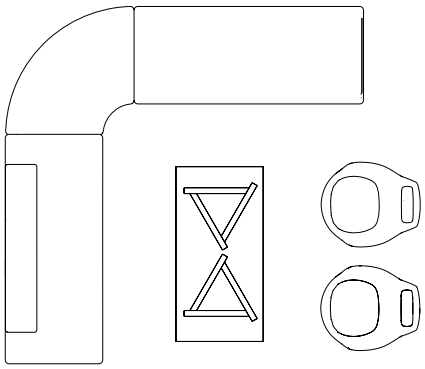

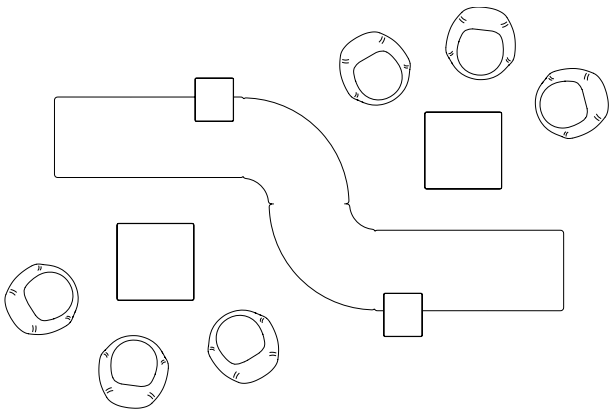

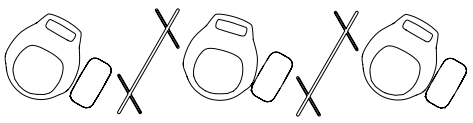

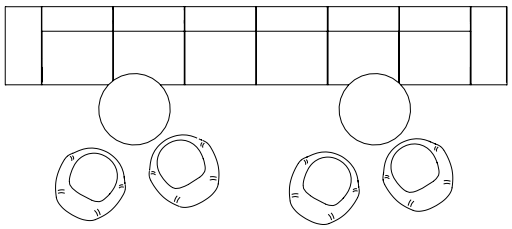

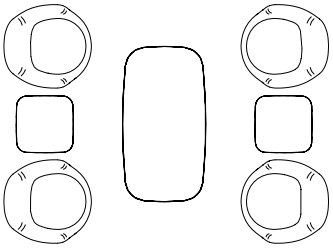

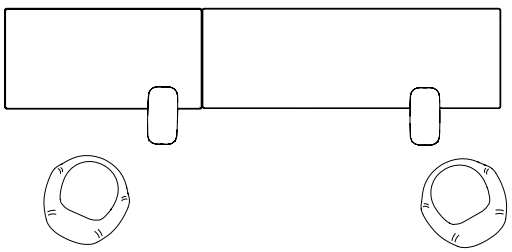

specifying dual finishes

The modularity of Dual permits a wide range of fabric combinations that allows for an expressive use of color, texture and material. The opaque knit base allows for light to pass through and contrasting upholstery allows for personalization.

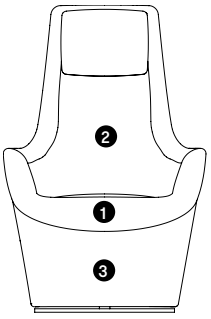

1. **Seat Upholstery**
   Select the seat upholstery
2. **Back Upholstery**
   Select the back upholstery
3. **Select Base Finish**
   Select knit finish or base upholstery

specification example

STDA Dual Low Back Lounge Chair, Knit Base		
1	Seat fabric Gr.5	3221
2	Back fabric Gr.5	333
3	Knit Finish	0
	Total:	$3554

STDC Dual High Back Lounge Chair, Knit Base		
1	Seat fabric Gr.5	3746
2	Back fabric Gr.3	276
3	Knit Finish	0
	Total:	$4022

STDB Dual Low Back Lounge Chair, Upholstered Base		
1	Seat fabric Gr.5	3746
2	Back fabric Gr.5	333
3	Base Upholstery Gr.3	212
	Total:	$4291

weights

Dual, Low Back Lounge, Knit Base	75 - 80 lbs
Dual, Low Back Lounge, Upholstered Base	75 - 80 lbs
Dual, High Back Lounge, Knit Base	80 - 85 lbs
Dual, High Back Lounge, Upholstered Base	80 - 85 lbs

COM/COL material requirement

Yardage is based on a non-patterned fabric. Additional yardage may be required for pattern repeats and the matching required. Leather yield may be affected by the quality of the COL. However, variance in the size of the hides will not affect the yield.

SINGLE UPHOLSTERY		COM [yards]	COL [sq. ft.]
Dual Low Back Lounge	Seat	1 3/4	31 1/2
	Back	2 3/4	49 1/2
Dual High Back Lounge	Seat	1 3/4	31 1/2
	Back	3 1/4	58 1/2

STDA **dual** low back lounge, knit base

Product Options

Style	Seat Pad Upholstery Finish	Back Upholstery Finish	Knit Base Finish
L Low Back Swivel Lounge Chair	Fabric Leather	Fabric Leather	**K413** Eggshell **K414** Stone **K415** Khaki **K416** Silver **K417** Taupe **K418** Graphite **K419** Goldenrod **K420** Sunset **K421** Cardinal **K422** Magenta **K423** Cobalt

Note Swivel version includes auto return to center swivel mechanism

Seat Pad Upholstery Finish Price

	COM	COL	Gr.1	Gr.2	Gr.3	Gr.4	Gr.5	Gr.6	Gr.7	Gr.8	Gr.9	Gr.10	Gr.11
L Low Back	3009	3309	3090	3126	3158	3193	3221	3243	3267	3293	3320	3348	3379

	Gr.12	Gr.13	Gr.14	Gr.15	Gr.16	Gr.17	Gr.18	Gr.19	Gr.20	Leather LB	LC	LD
L Low Back	3415	3460	3506	3551	3596	3640	3685	3731	3776	3797	4040	4121

Back Upholstery Finish Price

	COM	COL	Gr.1	Gr.2	Gr.3	Gr.4	Gr.5	Gr.6	Gr.7	Gr.8	Gr.9	Gr.10	Gr.11
L Low Back	0	116	128	184	234	291	333	369	404	447	490	531	581

	Gr.12	Gr.13	Gr.14	Gr.15	Gr.16	Gr.17	Gr.18	Gr.19	Gr.20	Leather LB	LC	LD
L Low Back	638	709	780	850	921	993	1064	1134	1205	766	1148	1276

STDB **dual** low back lounge, upholstered base

Product Options

Style	Seat Pad Upholstery Finish	Back Upholstery Finish	Base Upholstery Finish
L Low Back Swivel Lounge Chair	Fabric	Fabric	Fabric
	Leather	Leather	

Note Base upholstery only available in Full Wool, Heather Felt, Heather Tech, Digi Tweed, Percept and Ample from Luum Textiles
Swivel version includes auto return to center swivel mechanism

Seat Pad Upholstery Finish Price

	COM	COL	Gr.1	Gr.2	Gr.3	Gr.4	Gr.5	Gr.6	Gr.7	Gr.8	Gr.9	Gr.10	Gr.11
L Low Back	3533	3887	3615	3651	3682	3718	3746	3768	3791	3818	3844	3872	3903

	Gr.12	Gr.13	Gr.14	Gr.15	Gr.16	Gr.17	Gr.18	Gr.19	Gr.20	Leather LB	Leather LC	Leather LD
L Low Back	3939	3985	4030	4075	4120	4164	4210	4255	4300	4374	4618	4699

Back Upholstery Finish Price

	COM	COL	Gr.1	Gr.2	Gr.3	Gr.4	Gr.5	Gr.6	Gr.7	Gr.8	Gr.9	Gr.10	Gr.11
L Low Back	0	116	128	184	234	291	333	369	404	447	490	531	581

	Gr.12	Gr.13	Gr.14	Gr.15	Gr.16	Gr.17	Gr.18	Gr.19	Gr.20	Leather LB	Leather LC	Leather LD
L Low Back	638	709	780	850	921	993	1064	1134	1205	766	1148	1276

Base Upholstery Finish Price

	Gr.1	Gr.2	Gr.3	Gr.8	Gr.9
L Low Back	116	167	212	406	444

STDC **dual** high back lounge, knit base

Product Options

Style	Seat Pad Upholstery Finish	Back and Headrest Upholstery Finish	Knit Base Finish
H High Back Swivel Lounge Chair	Fabric Leather	Fabric Leather	**K413** Eggshell **K414** Stone **K415** Khaki **K416** Silver **K417** Taupe **K418** Graphite **K419** Goldenrod **K420** Sunset **K421** Cardinal **K422** Magenta **K423** Cobalt

Note Swivel version includes auto return to center swivel mechanism

Seat Pad Upholstery Finish Price

	COM	COL	Gr.1	Gr.2	Gr.3	Gr.4	Gr.5	Gr.6	Gr.7	Gr.8	Gr.9	Gr.10	Gr.11
H High Back	3533	3887	3615	3651	3682	3718	3746	3768	3791	3818	3844	3872	3903

	Gr.12	Gr.13	Gr.14	Gr.15	Gr.16	Gr.17	Gr.18	Gr.19	Gr.20	Leather LB	LC	LD
H High Back	3939	3985	4030	4075	4120	4164	4210	4255	4300	4374	4618	4699

Back and Headrest Upholstery Finish Price

	COM	COL	Gr.1	Gr.2	Gr.3	Gr.4	Gr.5	Gr.6	Gr.7	Gr.8	Gr.9	Gr.10	Gr.11
H High Back	0	116	151	218	276	343	393	436	478	528	578	629	687

	Gr.12	Gr.13	Gr.14	Gr.15	Gr.16	Gr.17	Gr.18	Gr.19	Gr.20	Leather LB	LC	LD
H High Back	754	838	921	1006	1089	1173	1256	1341	1424	905	1357	1508

STDD **dual** high back lounge, upholstered base

Product Options

Style	Seat Pad Upholstery Finish	Back and Headrest Upholstery Finish	Base Upholstery Finish
H High Back Swivel Lounge Chair	Fabric Leather	Fabric Leather	Fabric

Note Base upholstery only available in Full Wool, Heather Felt, Heather Tech, Digi Tweed, Percept and Ample from Luum Textiles
Swivel version includes auto return to center swivel mechanism

Seat Pad Upholstery Finish Price

	COM	COL	Gr.1	Gr.2	Gr.3	Gr.4	Gr.5	Gr.6	Gr.7	Gr.8	Gr.9	Gr.10	Gr.11
H High Back	4058	4464	4139	4175	4206	4242	4270	4292	4315	4342	4369	4396	4428

	Gr.12	Gr.13	Gr.14	Gr.15	Gr.16	Gr.17	Gr.18	Gr.19	Gr.20	Leather LB	Leather LC	Leather LD
H High Back	4464	4509	4554	4599	4645	4689	4734	4779	4824	4951	5194	5276

Back and Headrest Upholstery Finish Price

	COM	COL	Gr.1	Gr.2	Gr.3	Gr.4	Gr.5	Gr.6	Gr.7	Gr.8	Gr.9	Gr.10	Gr.11
H High Back	0	116	151	218	276	343	393	436	478	528	578	629	687

	Gr.12	Gr.13	Gr.14	Gr.15	Gr.16	Gr.17	Gr.18	Gr.19	Gr.20	Leather LB	Leather LC	Leather LD
H High Back	754	838	921	1006	1089	1173	1256	1341	1424	905	1357	1508

Base Upholstery Finish Price

	Gr.1	Gr.2	Gr.3	Gr.8	Gr.9
H High Back	116	167	212	406	444